Digital Electronic Circuits (EC2L004)

Lecture 4: Boolean Algebra, Canonical forms

Learning Objectives

- Boolean Algebra
  - Why Boolean algebra ?
  - Laws, postulates, and theorems of Boolean algebra
- Boolean functions and implementation
- Algebraic manipulation
- Complement of a function
- Canonical forms

Boolean Algebra

Why Boolean Algebra?

- It is highly desirable to find the simplest circuit implementation with the smallest number of gates or wires.
  - Reduced cost

- We can use *Boolean minimization* process to reduce a Boolean function (expression) to its simplest form: The result is an expression with the fewest literals and thus less wires in the final gate implementation.

Boolean Algebra (contd.)

- George Boole (1815-1864), a mathematician introduced a systematic treatment of logic.

- He developed a consistent set of postulates that were sufficient to define a new type of algebra: Boolean Algebra (similar to Linear Algebra)

- Many of the rules are the same as the ones in Linear Algebra.

Laws of Boolean Algebra

- There are 6 fundamental laws, or axioms, used to formulate various algebraic structures:

1. *Closure:* Boolean algebra operates over a field of numbers, $B = \{0,1\}$:

   For every x, y in B:

- $x + y$ is in B
- $x \,.\, y$ is in B

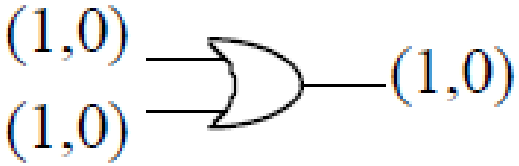

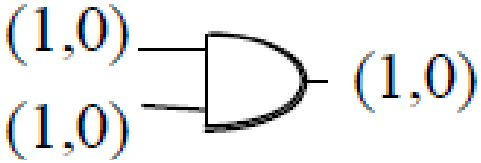

Laws of Boolean Algebra (Contd.)

2. *Commutative* laws: For every x, y in B,

- $x + y = y + x$
- $x \,.\, y = y \,.\, x$

» Similar to Linear Algebra

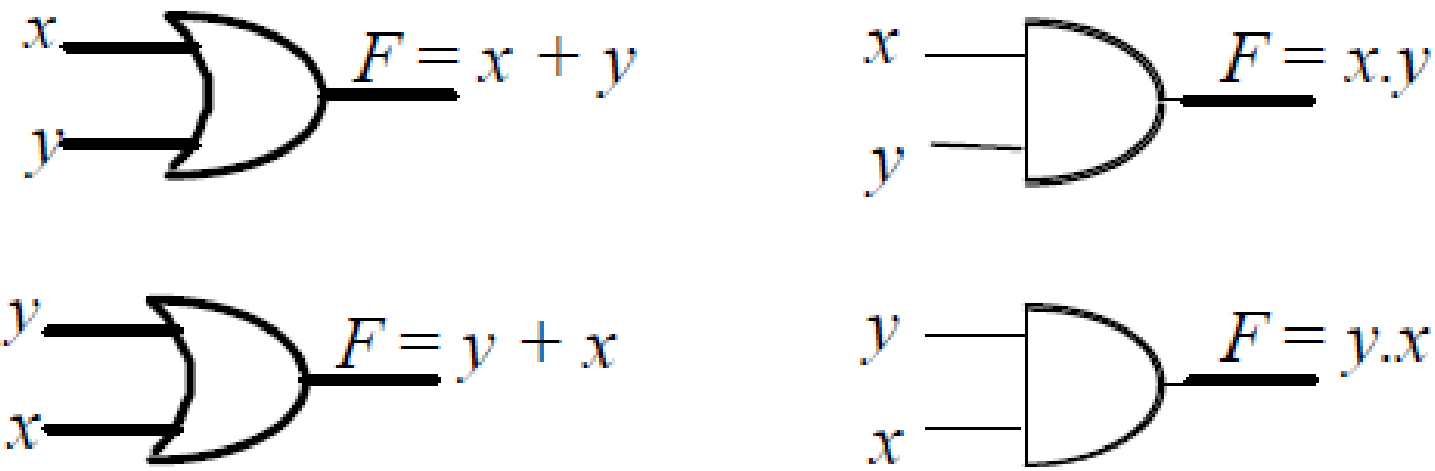

Laws of Boolean Algebra (Contd.)

3. *Associative laws*: For every x, y, z in B,

- $(x + y) + z = x + (y + z) = x + y + z$
- $(xy)z = x(yz) = xyz$

» Similar to Linear Algebra

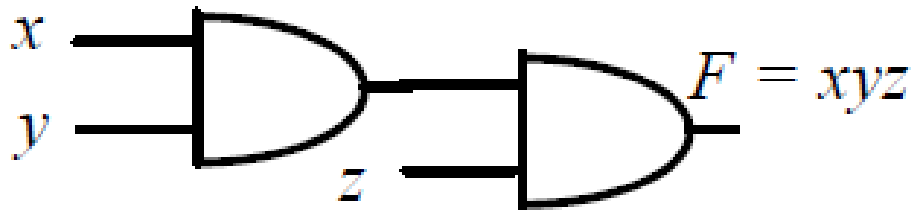

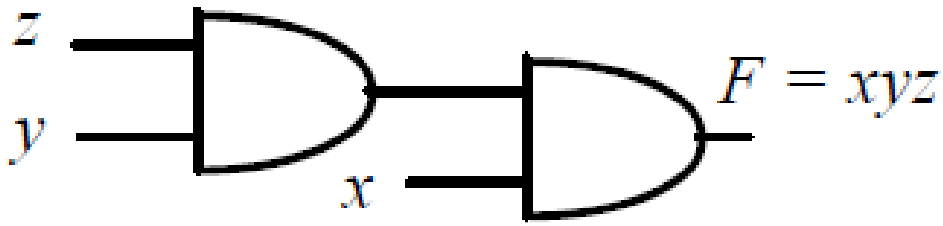

Laws of Boolean Algebra (Contd.)

4. *Distributive laws*: For every x, y, z in B,

- $x + (y.z) = (x + y)(x + z)$ [+ is distributive over .]

  » NOT Similar to Linear Algebra

- $x.(y + z) = (x.y) + (x.z)$ [. is distributive over +]

  » Similar to Linear Algebra

Laws of Boolean Algebra (Contd.)

5. Identity laws:

- A set *B* is said to have an identity element with respect to a binary operation {.} on *B* if there exists an element designated by 1 in *B* with the property: $\underline{1 \,.\, x = x}$

  Example: AND operation

- A set *B* is said to have an identity element with respect to a binary operation {+} on *B* if there exists an element designated by 0 in *B* with the property: $\underline{0 + x = x}$

  Example: OR operation

» Similar to Linear Algebra

Laws of Boolean Algebra (Contd.)

6. *Complement*

For each x in B, there exists an element x' in B (the complement of x) such that:

- $x + x' = 1$
- $x \,.\, x' = 0$

We can also use $\overline{x}$ to represent complement.

Postulates and theorems of Boolean Algebra

Postulate 2	(a)	$x + 0 = x$	(b)	$x \cdot 1 = x$
Postulate 5	(a)	$x + x' = 1$	(b)	$x \cdot x' = 0$
Theorem 1	(a)	$x + x = x$	(b)	$x \cdot x = x$
Theorem 2	(a)	$x + 1 = 1$	(b)	$x \cdot 0 = 0$
Theorem 3, involution		$(x')' = x$		
Postulate 3, commutative	(a)	$x + y = y + x$	(b)	$xy = yx$
Theorem 4, associative	(a)	$x + (y + z) = (x + y) + z$	(b)	$x(yz) = (xy)z$
Postulate 4, distributive	(a)	$x(y + z) = xy + xz$	(b)	$x + yz = (x + y)(x + z)$
Theorem 5, DeMorgan	(a)	$(x + y)' = x' y'$	(b)	$(xy)' = x' + y'$
Theorem 6, absorption	(a)	$x + xy = x$	(b)	$x(x + y) = x$

Duality

- Duality principle states that every algebraic expression deducible from the postulates of Boolean algebra remains valid if the operators and identity elements are interchanged.

- In a two-valued Boolean algebra, the identity elements and the elements of the set *B* are the same: 1 and 0. The duality principle has many applications.

- If the *dual* of an algebraic expression is desired, we simply interchange OR and AND operators and replace 1's by 0's and 0's by 1's.

Theorems

- Theorem 1(a):

$$x + x = x$$

$$\begin{aligned} x + x &= (x + x).1 \\ &= (x + x)(x + x') \\ &= xx + xx' \\ &= x + 0 \\ &= x \end{aligned}$$

- Theorem 1(b):

$$x \,.\, x = x$$

$$\begin{aligned} x \,.\, x &= xx + 0 \\ &= xx + xx' \\ &= x(x + x') \\ &= x \,.\, 1 \\ &= x \end{aligned}$$

Theorems

- Theorem 2(a):

$$x+1=1$$

$$\begin{aligned} x+1 &= 1.(x+1) \\ &= (x+x')(x+1) \\ &= xx+x'.1 \\ &= x+x' \\ &= 1 \end{aligned}$$

- Theorem 2(b):

$$x+xy=x$$

$$\begin{aligned} x+xy &= x(1+y) \\ &= x(y+1) \\ &= x.1 \\ &= x \end{aligned}$$

Theorems

THEOREM 6(a): $x + xy = x.$

Statement	Justification
$x + xy = x \cdot 1 + xy$	postulate 2(b)
$= x(1 + y)$	4(a)
$= x(y + 1)$	3(a)
$= x \cdot 1$	2(a)
$= x$	2(b)

THEOREM 6(b): $x(x + y) = x$ by duality.

Gate Equivalency and DeMorgan's Law

$$x' \cdot y' = (x + y)'$$

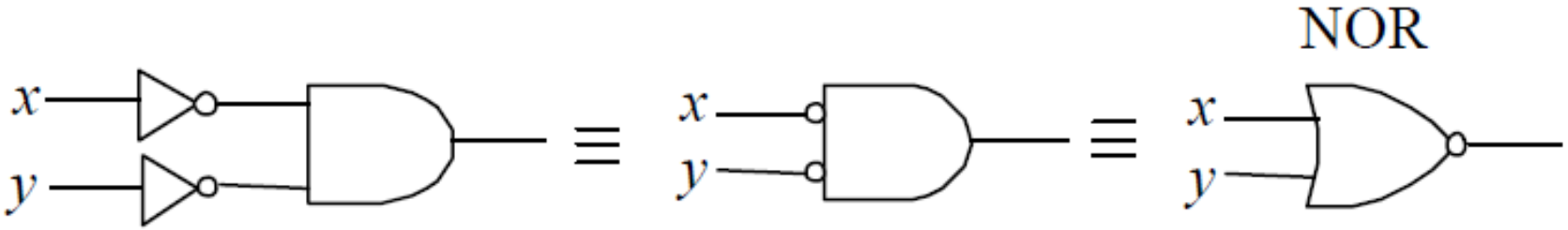

$$x' + y' = (x \cdot y)'$$

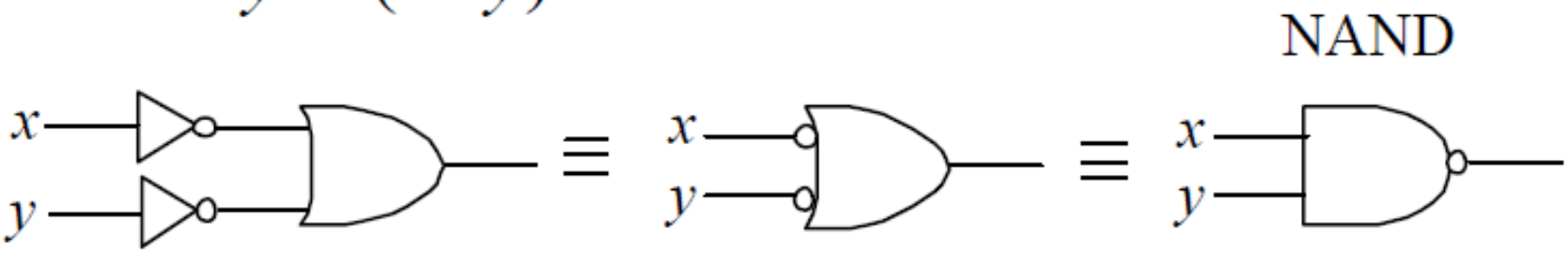

Operator Precedence

- The operator precedence for evaluating Boolean expression is

    1. Parentheses
    2. NOT
    3. AND
    4. OR

Example: (x + y)'

x	y	$x + y$	$(x + y)'$
0	0	0	1
0	1	1	0
1	0	1	0
1	1	1	0

x'	y'	$x'y'$
1	1	1
1	0	0
0	1	0
0	0	0

Example 1

Using the basic theorems and postulates of Boolean algebra, simplify the following Boolean expression:

$$f = x'y'z + xyz + x'yz + xy'z$$

Example 2

- Develop a truth table for the Boolean expression F =x’y’z.

Boolean Functions and implementation

- A Boolean function expresses the logic relationship between binary variables.
  - It is evaluated by determining the binary value of the expression for all possible values of their variables.

Example 1: $F_1 = x + y'z$

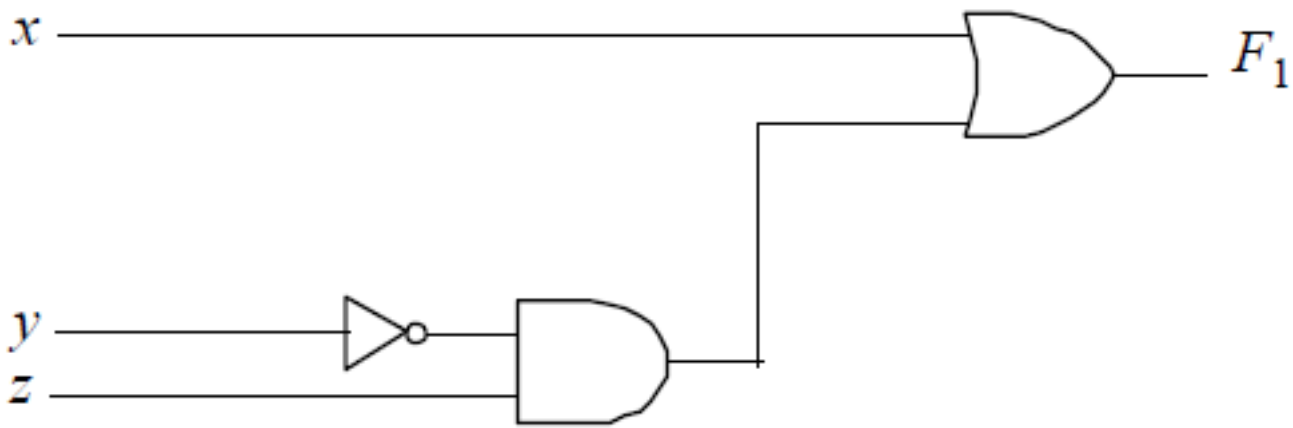

Implementation of Boolean Functions:

Example 2: $F_1 = x'y'z + x'yz + xy'$

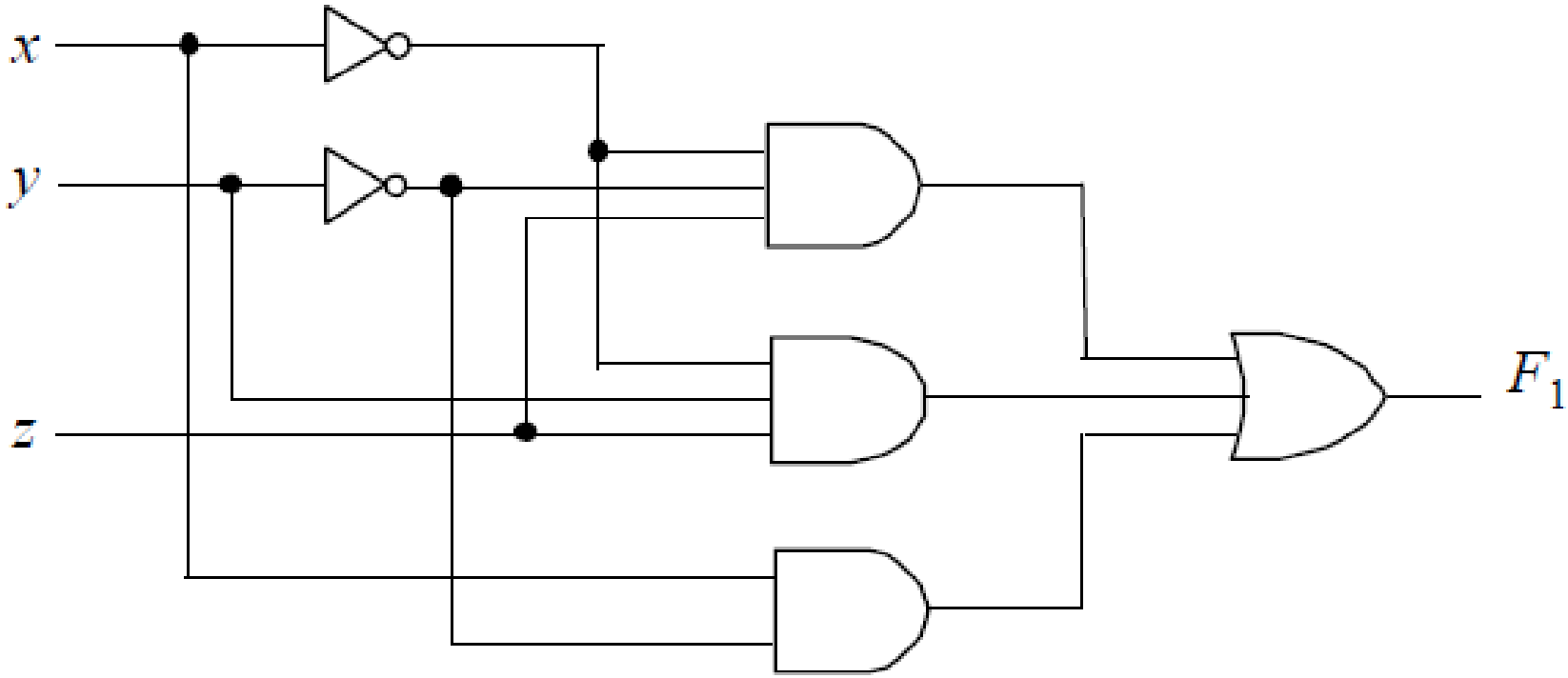

Implementation of Boolean Functions:

Try another implementation using a simplified F_2:

$$F_2 = x'y'z + x'yz + xy'$$
$$= x'z(y'+y) + xy'$$
$$= x'z(1) + xy'$$
$$= x'z + xy'$$

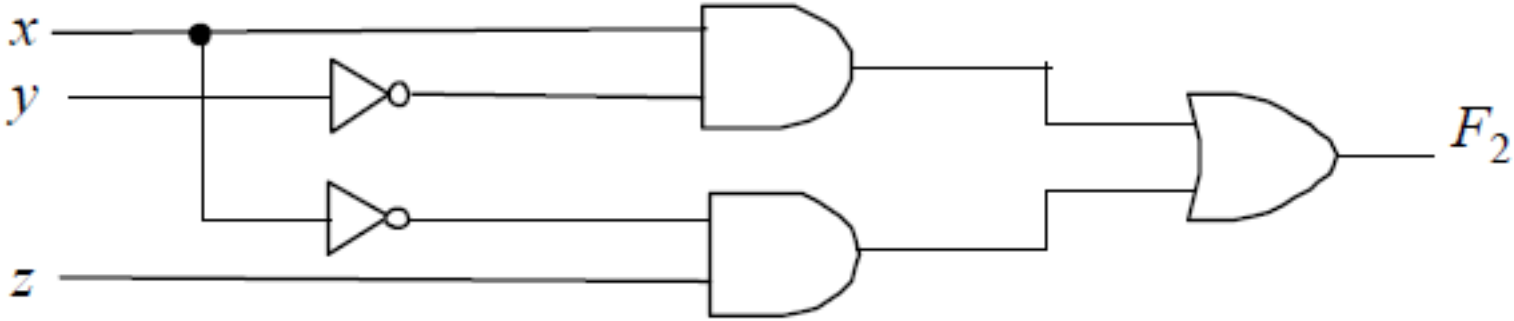

- What are the advantages with this implementation?
  - Fewer gates and wires than the previous implementation.

Algebraic Manipulation

- The manipulation of Boolean algebra consists mostly of reducing an expression for the purpose of obtaining a simpler circuit.

- By reducing the number of terms, the number of literals, or both in Boolean expression, it is often possible to obtain a simpler circuit.

- Simplify the following Boolean function to a minimum number of terms:

$$F(x,y,z) = xy + x'z + yz$$

Complement of a Function

- The complement of a function *F* is *F'* and is obtained from an interchange of 0's for 1's and 1's for 0's in the value of F.

- It can be derived algebraically through DeMorgan's theorem:

$$\overline{(A+B+C+\ldots)} = \overline{A}.\overline{B}.\overline{C}\ldots$$

$$\overline{(A.B.C\ldots)} = \overline{A}+\overline{B}+\overline{C}+\ldots$$

- A simple procedure for deriving the complement of a function is to take the dual of the function and complement each literal.

Example 3:

- Find the complement of

$$F_1 = x'yz'+x'y'z$$

Using

1) DeMorgan's law
2) Taking dual of F_1 and complimenting each literal.

Canonical Forms

Minterms and Maxterms

- *n* binary variables can be combined to form 2^n terms (AND terms), called *minterms.*

- In a similar fashion, *n* binary variables can be combined to form 2^n terms (OR terms), called *maxterms.*

  - Note that each *maxterm* is the complement of its corresponding *minterm* and vice versa.

Minterms and Maxterms for Three Binary Variables

			Minterms		Maxterms	
x	y	z	Term	Designation	Term	Designation
0	0	0	$x'y'z'$	m_0	$x+y+z$	M_0
0	0	1	$x'y'z$	m_1	$x+y+z'$	M_1
0	1	0	$x'yz'$	m_2	$x+y'+z$	M_2
0	1	1	$x'yz$	m_3	$x+y'+z'$	M_3
1	0	0	$xy'z'$	m_4	$x'+y+z$	M_4
1	0	1	$xy'z$	m_5	$x'+y+z'$	M_5
1	1	0	xyz'	m_6	$x'+y'+z$	M_6
1	1	1	xyz	m_7	$x'+y'+z'$	M_7

A Boolean function can be expressed algebraically from a given truth table by forming a minterm for each combination of the variables that produces a 1 in the function and then taking the OR of all those terms.

Minterms and Maxterms (Contd.)

- Boolean function expressed as a sum of minterms or product of maxterms are said to be in *canonical* form.

x	y	z	Function f_1	Function f_2
0	0	0	0	0
0	0	1	1	0
0	1	0	0	0
0	1	1	0	1
1	0	0	1	0
1	0	1	0	1
1	1	0	0	1
1	1	1	1	1

Example 4:

- Express the Boolean function $F(A,B,C) = A + B'C$ as a sum of minterms.

Truth Table for $F = A + B'C$

A	B	C	F
0	0	0	0
0	0	1	1
0	1	0	0
0	1	1	0
1	0	0	1
1	0	1	1
1	1	0	1
1	1	1	1

Example 5:

- Express the Boolean function $F(x,y,z)=xy+x'z$ as a product of maxterms.

Conversion between Canonical Forms:

- To convert from one canonical form to another, interchange symbols $\sum$ and $\prod$ and list those numbers missing from the original form.

Truth Table for $F = xy + x'z$

x	y	z	F
0	0	0	0
0	0	1	1
0	1	0	0
0	1	1	1
1	0	0	0
1	0	1	0
1	1	0	1
1	1	1	1

Minterms

Maxterms

Example 6:

Find a product of maxterms expression for

$$F(x,y,z) = \sum(1, 2, 3, 5, 7)$$

Example 7:

Find a sum of minterms expression for

$$F(x,y,z) = \prod(1, 3, 4, 6)$$

Standard SOP → minterm
Standard POS → maxterm

Standard Forms:

- Canonical forms are very seldom the ones with the least number of literals.
- In Standard Form (sop/pos), terms that form the function may contain one, two, or any number of literals.

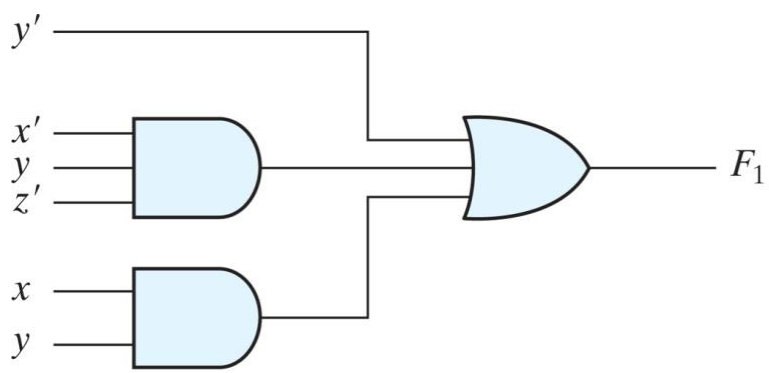

(a) Sum of Products

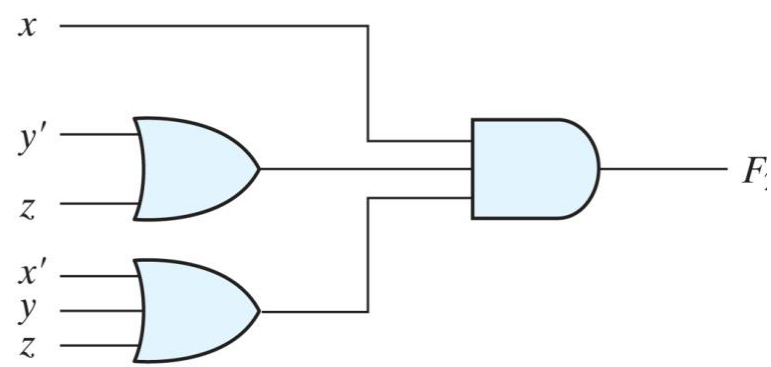

(b) Product of Sums

Example 8:

- Function expressed in a nonstandard form, can be changed to standard form.

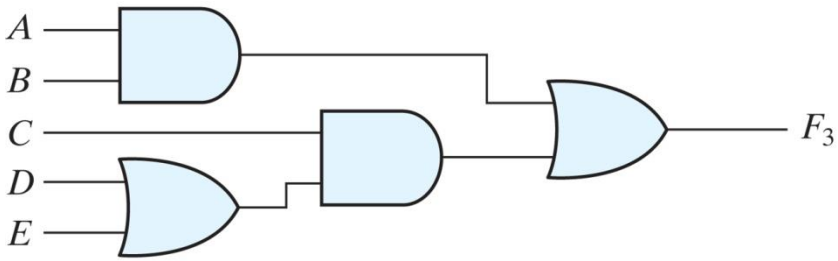

(a) $AB + C(D + E)$

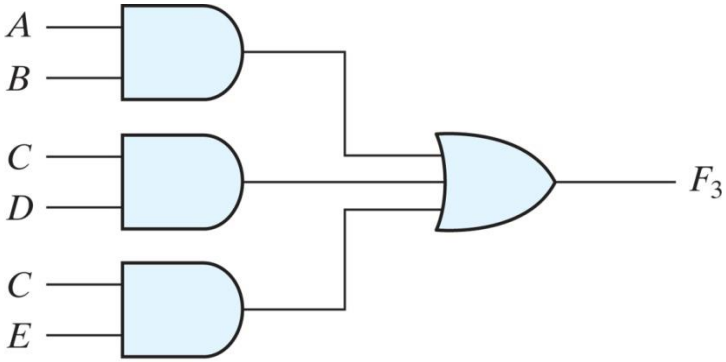

(b) $AB + CD + CE$

Thank you !!!